ALLEGION

EN2-7

EN 2-5
2720

2710/061/00
Issue No. 5

1 2 3 4

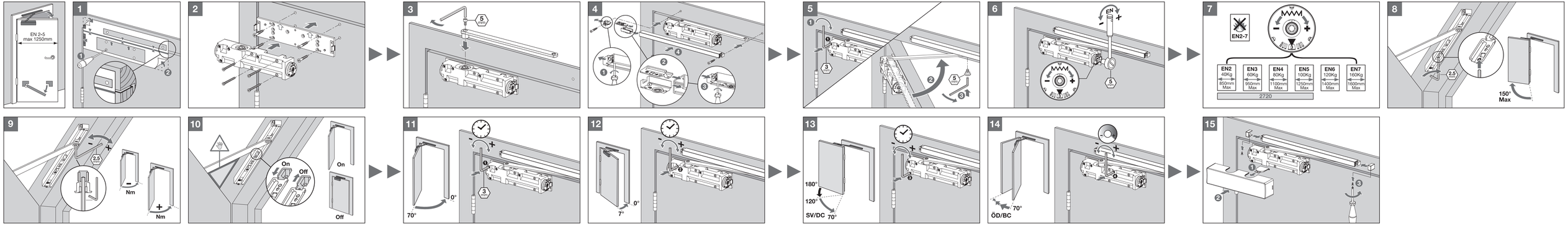

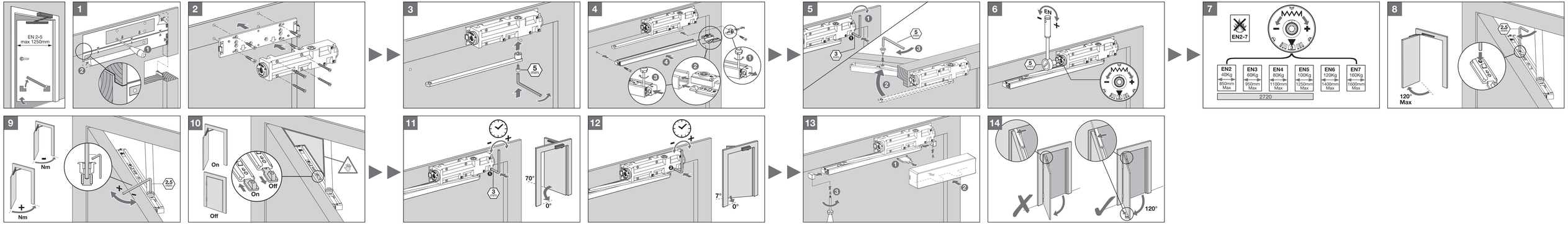

10212 ZINS-BB696

ALLEGION

EN2-7

EN 2-5
2720

2710/061/00
Issue No. 5
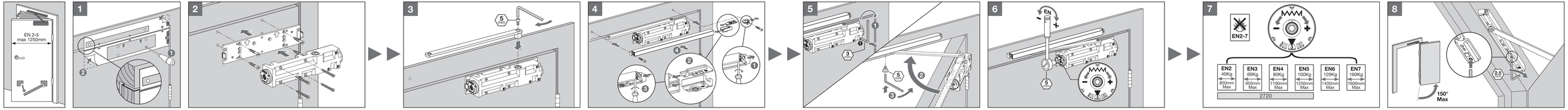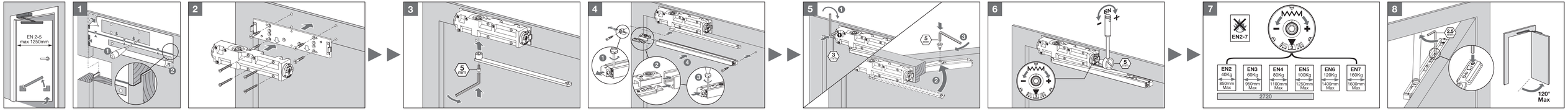
1 2 3 4